Duplex®
CLEANING MACHINES (U.K.) LTD

STEAMTECH 12000/4000

ENGLISH

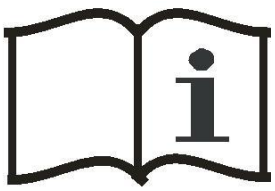

INTERPRETATION OF THE SYMBOLS PLACED ON THE UNIT

BEFORE USING THE STEAM GENERATOR, READ AND FOLLOW THIS INSTRUCTION MANUAL.

IT IS RECOMMENDED TO KEEP THIS INSTRUCTION MANUAL TO CONSULT IT LATER OR TO GIVE IT TO THE FOLLOWING OWNERS.

PLEASE READ THE SAFETY INSTRUCTIONS ON THIS HANDBOOK BEFORE PROCEEDING ON THE FIRST USE. EVENTUAL DAMAGES DUED TO THE CARRIAGE MUST BE COMUNICATED AS SOON AS POSSIBLE TO YOUR OWN RETAILER.

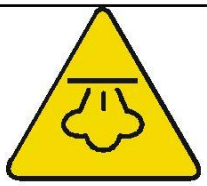	**ATTENTION!!** **STEAM…. VERY HOT SURFACE**
	ATTENTION !
	READ THE OPERATING MANUAL
	OPRATING MANUAL; **OPERATING INSTRUCTIONS**
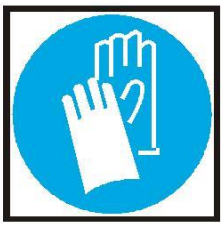	**BURNING DANGER!!** **IT IS COMPULSORY TO USE PROTECTIVE GLOVES.**
	EQUIPMENT WITH SOUND PRESSURE LEVEL > 85db **IT IS COMPULSORY TO USE EARS PROTECTIVE SHROUDS.**

ENVIRONMENT PROTECTION

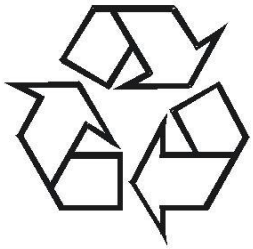	ALL THE PACKINGS ARE RECYCLABLE, PACKINGS DO NOT HAVE TO BE THROWN IN THE DOMESTIC WASTE BUT THEY HAVE TO BE DELIVERED TO THE CENTERS SPECIALIZED FOR THE DISPOSING OF THE WASTE.

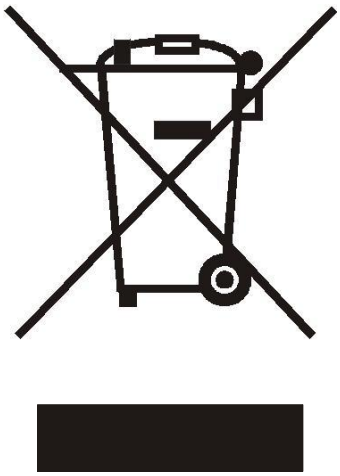	ALL DEVICES NOT USED ANYMORE CONTAIN PRECIOUS RECICLABLE MATERIALS THAT SHOULD BE DELIVERED TO THE CENTERS SUITABLE FOR THE DISPOSING OF THE WASTE. ELECTRIC AND ELECTRONIC EQUIPMENT, BATTERIES, OIL AND SIMILAR SUBSTANCES MUST BE RECICLED IN THE PROPER RECICLING CENTERS AND MUST NOT BE LEFT IN THE ENVIRONMENT.
	SUBSTANCES SUCH AS OIL FOR MOTORS, DIESEL OIL, PETROL MUST NOT BE LEFT IN THE ENVIRONMENT AND MUST BE RECICLED IN THE PROPER RECICLING CENTERS ACCORDING TO THE ENVIRONMENTAL REGULATIONS.

1. SUMMARY

1.	SUMMARY	4
2.	SAFETY REGULATIONS	4
3.	TECHNICAL CHARACTERISTICS	6
4.	PREFACE	6
5.	TECHNICAL DRAWINGS	7
6.	PARTS LIST	11
7.	OPERATING INSTRUCTIONS	12
8.	MAINTENANCE	15
9.	BEFORE REFERRING TO THE TECHNICAL SERVICE	17
10.	DECLARATION OF CONFORMITY	18

2. SAFETY REGULATIONS

The electric supply connection shall be made by a qualified electrician and comply with IEC 60364-1.

It is recommended that the electric supply to this machine should include either a residual current device that will interrupt the supply if the leakage current to earth exceeds 30ma for 30ms or a device, which will prove the earth circuit.

SAFETY VALVE This machine is equipped with two safety valves, able to ensure the safety of the machine itself in case other primary control devices are inefficient (due to a failure). Due to the extreme importance of these components and as not to compromise the safety of the machine, it is recommended to provide to check them and to substitute them through an authorized service center every 2 years starting from the purchasing date.

PRESSURE SWITCH This machine is equipped with a pressure switch able to check and to maintain the pressure under certain preset limits (ref. “rated pressure” on the technical label underneath the machine). In case there would be a steam leakage on the lower side of the machine, it means that the functioning of this device has been compromised and the safety valve has been involved as to limit the boiler’s internal pressure. **It is recommended not to use the machine, immediately unplug the machine from the power feeding and call the service center.**

CALCIUM DRAIN FROM THE BOILER If you are not acquainted with the hardness level of the used water, it is recommended to proceed with the boiler cleaning (according to the procedure indicated in the proper section) after 24 hours of usage. On the contrary, if you know the hardness level and it is between 0 and 4 French degrees , the boiler cleaning can be carried out after 100 hours of usage.

ATTENTION. Do not use the appliance within the range of persons unless they wear

protective clothing.

ATTENTION. The high pressure jets can be dangerous if not used properly. The jet does not have to be directed against persons, electrical devices under tension or the unit itself.

Do not direct the jet against yourself or others in order to clean clothes or footwear.

Disconnect the power supply before proceeding with the maintenance effected by the user.

This device is not intended to be used by persons (including children) with a reduced physical, mental or sensorial ability or with insufficient experience and/or competence, unless they are not supervised by a person responsible for their safety and they are not instructed by that person on how to use the device.

Monitor the children so they cannot play with the machine.

To ensure the machine's safety, use only original spare parts from the manufacturer or spare parts approved by the manufacturer.

ATTENTION. Pressure hoses, fitting and couplings are important for the safety of the machine. Use only hoses, fitting and couplings recommended by the manufacturer.

Do not use the machine if the power cord or other important parts of the machine are damaged, i.e. safety devices, pressure hoses and trigger gun.

If an extension cord is used, the plug and socket must be of a watertight construction.

ATTENTION. Inadequate extension cords can be dangerous.

The user must not leave the iron (optional) unattended when it is connected to the power supply.

The hand-arm vibration data, referred to this device, are not mentioned as they are below 2.5 m / s ².

ATTENTION. Wear ear protections while using this machine .

ATTENTION. BURNING DANGER Use gloves to protect hands.

ATTENTION. This appliance has been designed for a use with cleaning agents supplied or recommended by the manufacturer. The use of other cleaning agents or chemicals may adversely affect the safety of the appliance. If using detergent (which has not to be foamy) please follow the specific instructions: 1 liter detergent for every 10 liters water (about 10% is the detergent percentage), making sure to fill in first the detergent to obtain a better mixing. **Please be careful with the detergent to be used, as some in commerce, if heated above 100°C , taken to the gaseous state, could emanate highly toxic steams. Be aware to control the technical schedule and to consult the supplier.**

3. TECHNICAL CHARACTERISTICS

To verify the technical data of your model, consult the plate under the appliance.

4. PREFACE

Dear Client,

We would like to congratulate you on your choice.

With the goal of improving and continually updating production by always offering innovative products, TECNOVAP has studied, designed and created the **STEAMTECH**; a combined machine for cleaning which brings together the power of steam and the force of vacuuming.

This product is equipped with a dependable stainless steel boiler with automatic refilling system which allows it to produce a powerful and continuous supply of steam (24/24 hours).

The **STEAMTECH** model is also equipped with a separate detergent tank which enables the injection of a detergent with hot water at 90-125°C.

With the power of steam, meaning ecological cleaning power, Tecnovap has combined a powerful vacuum able to pick up solids and liquids.

The **STEAMTECH** is the ideal solution when it comes to cleaning and disinfecting. With the various accessories available, it cleans, disinfects, and removes dirt eliminating completely even the bacterial flora hidden in those areas most difficult to reach.

5. TECHNICAL DRAWINGS

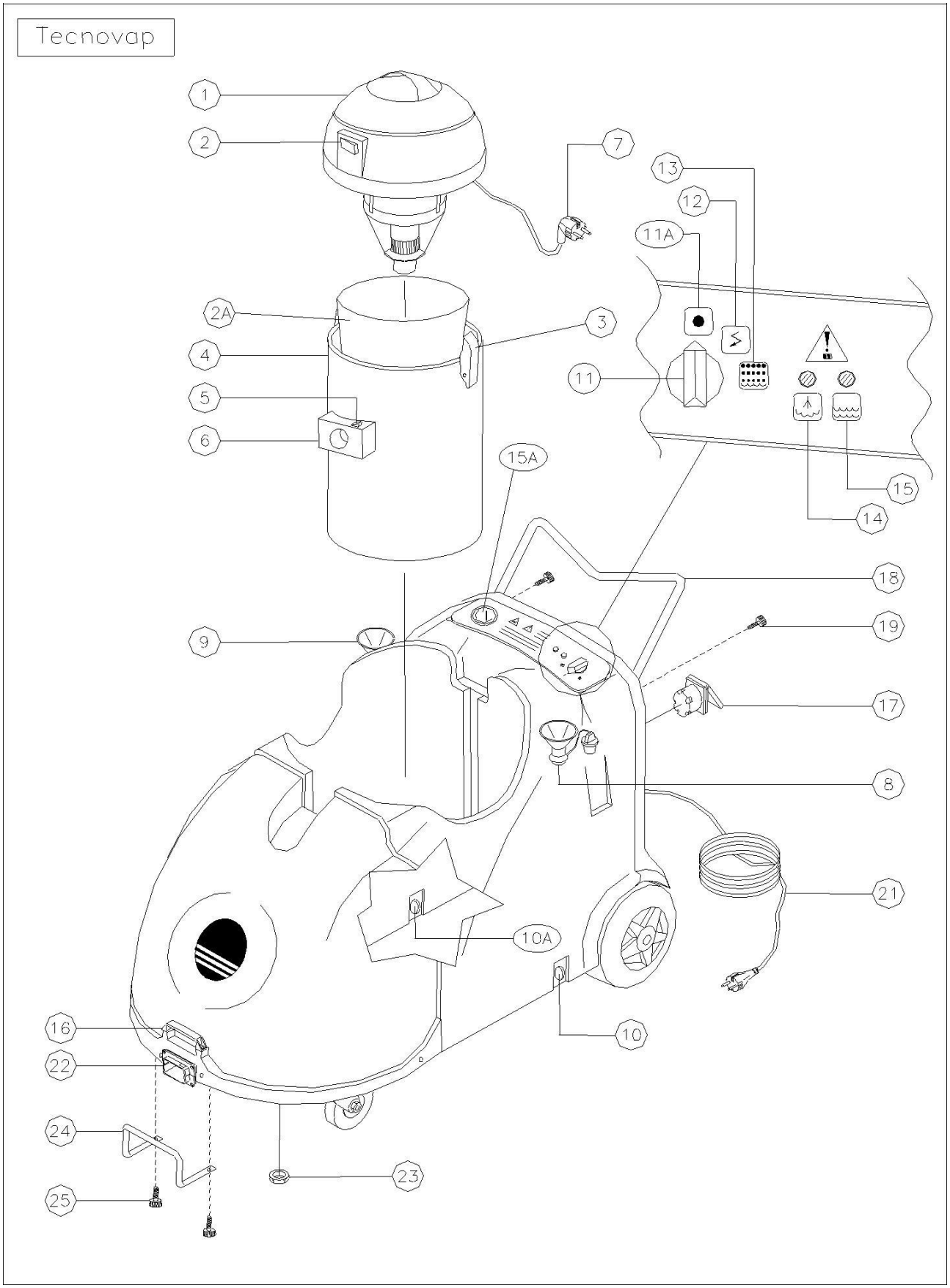

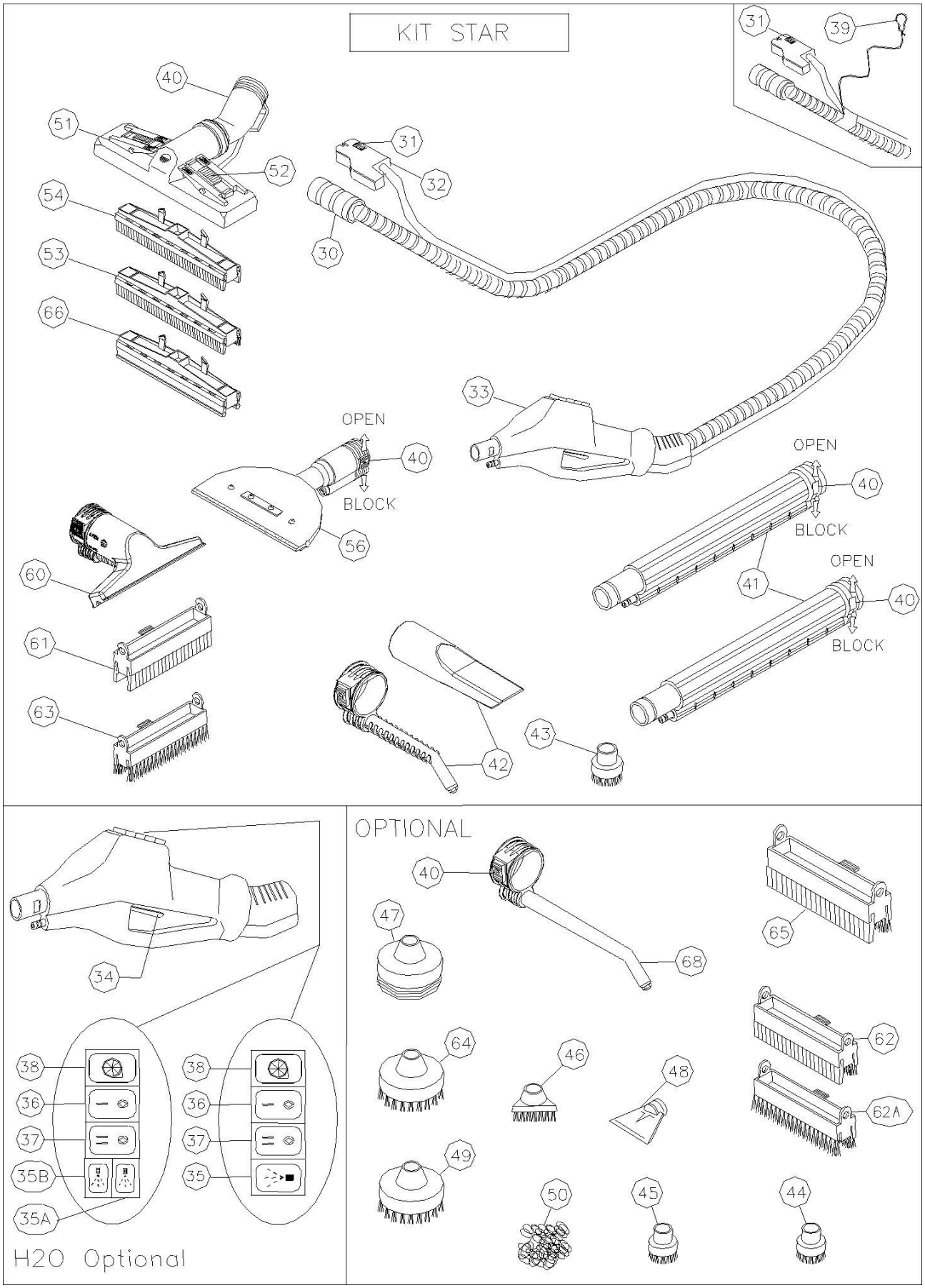
KIT STAR
31
39
40
51
52
31
32
54
30
53
66
33
OPEN
40
BLOCK
56
OPEN
40
BLOCK
60
41
OPEN
40
61
BLOCK
63
43
42
OPTIONAL
40
47
68
65
34
64
46
48
62
62A
38
36
37
35B
35A
38
36
37
35
49
50
45
44
H2O Optional

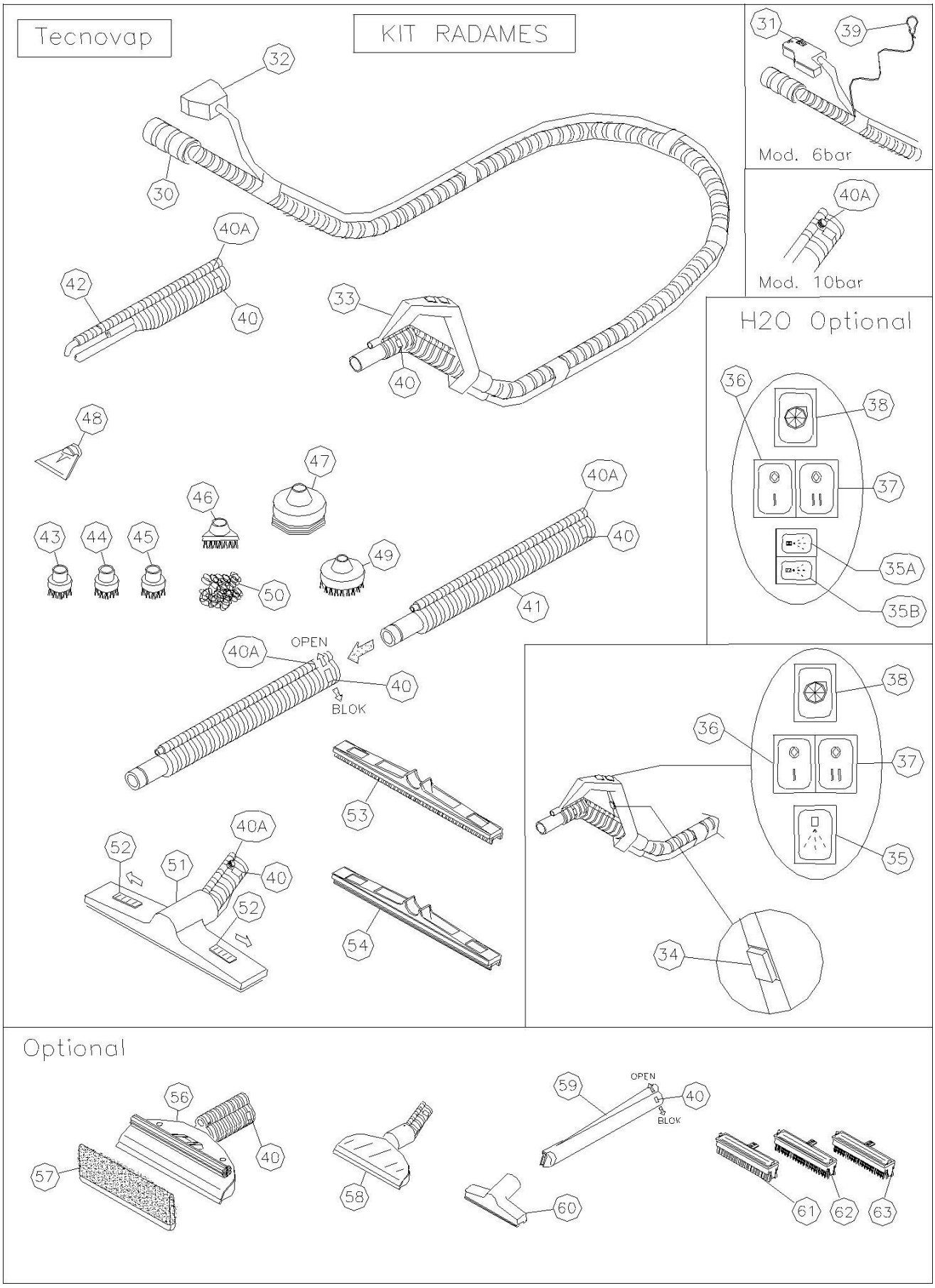
Tecnovap
KIT RADAMES
Mod. 6bar
Mod. 10bar
H2O Optional
OPEN
BLOK
Optional

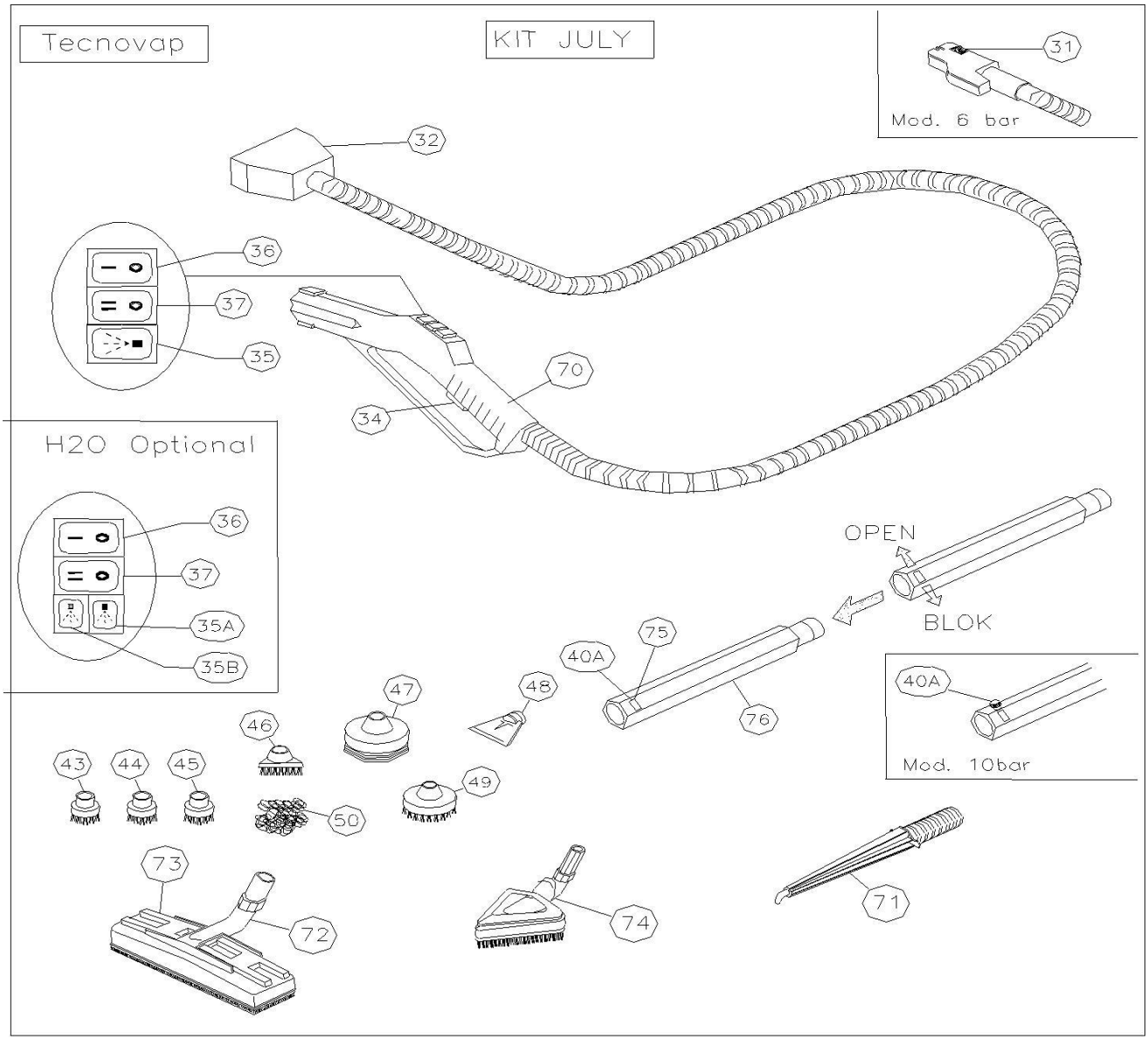
Tecnovap
KIT JULY
31
Mod. 6 bar
32
36
37
35
70
34
H2O Optional
36
37
35A
35B
OPEN
BLOK
75
40A
76
40A
Mod. 10bar
47
48
46
43
44
45
49
50
73
72
74
71

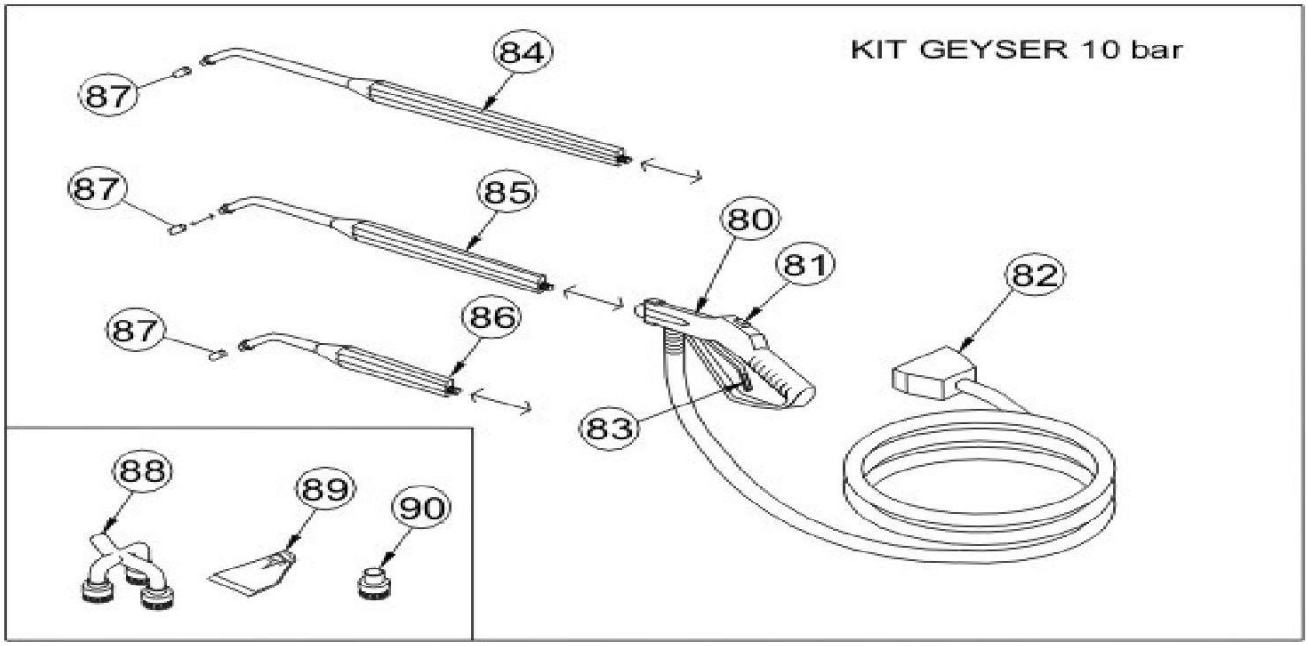
KIT GEYSER 10 bar
84
87
87
85
80
81
82
87
86
83
88
89
90

6. PARTS LIST

1) Vacuum motor
2) Vacuum power switch
2A) Nylon filter for non soluble powders (optional)
3) Clamping hooks for vacuum drum
4) Vacuum drum (14 liters)
5) Locking latch vacuum outlet
6) Vacuum hose outlet
7) Power cord vacuum cleaner
8) Detergent tank cap (yellow)
9) Water tank cap (blue)
10) Drain cap detergent tank
10A) Drain cap water tank
11) General power switch
11A) Position - OFF
12) Position – general ignition
13) Position – boiler ignition
14)) “Ready steam” indicator (green)
15) “Low water” indicator (red)
15A) Pressure gauge / Hour meter
16) Carrying handle
17) Electric socket for vacuum cleaner
18) Handle bar
19) Hand wheel screw for handle bar (20mm)
21) Power cord
22) Steam outlet
23) Boiler drain cap
24) Bumper handle
25) Hand wheel screw for bumper handle (20mm)
30) Vacuum hose coupler
31) Locking latch steam plug
32) Steam plug
33) Steam & vacuum hose w/ handgrip
34) Steam command switch
35) Detergent command switch (intermittent)
35A) Detergent switch (only for models with hot water
35B) Water switch (only for models with hot water
36) Steam adjustment switch (minimum)
37) Steam adjustment switch (medium)
38) Vacuum switch
39) Hook for hose fixing (only for 6 bar models)
40) Locking latches for accessories
40A) Hand wheel screw (only for 10 bar models)
41) Steam & vac Extension tube
42) Steam & vac turbo lance
43) Nylon brush (Ø 28mm)
44) Brass brush (Ø 28mm)
45) St. steel brush (Ø 28mm)
46) Small triangular brush
47) Steam plunger
48) Steam scraper
49) Nylon brush (Ø 60mm)
50) St. steel wool pad
51) Floor tool for inserts
52) Locking latches for inserts
53) Insert squeegee / brush (L.375mm)
54) Insert squeegee / squeegee (L.375mm)
56) Steam & vacuum window cleaner (optional)
57) Cloth for window cleaner (optional)
58) Transparent carpet tool (optional)
59) Steam & vac lance (optional)
60) Upholstery nozzle (optional)
61) Insert squeegee / squeegee (L.145mm) (optional)
62) Insert squeegee / brush (L.145mm) (optional)
62A) Insert steel / steel (L.145mm) (optional)
63) Insert brush / brush (L.145mm) (optional)
64) St. steel brush (Ø 60mm) (optional)
65) Insert squeegee / brush (L.300mm) (optional)
66) Carpet insert
68) Long steam lance (optional)
70) Steam hose w/ handgrip
71) Steam lance
72) Rectangular brush
73) Cloth holder
74) Triangular brush
75) Locking latches for accessories
76) Steam only extension tube
80) Steam hose Geyser w/handgrip
81) Detergent switch
82) Steam plug
83) Steam command switch
84) Lance 400 mm
85) Lance 800 mm
86) Lance 1200 mm
87) Round nozzle
88) Triangular stainless steel brush
89) Flat nozzle 4 cm
90) Stainless steel brush

6. OPERATING INSTRUCTIONS

(a) After opening the packaging box, fix the handle bar (18) to the rear support plate and lock it with the two hand wheel screws (19). Carry out the same operations with the bumper handle (24) by fixing the hand wheel screws (25) under the chassis, next to the front wheels

(b) Insert the plug (7) into the outlet (17) and verify that the vacuum power switch (2) on the vacuum head is in ON position.

(c) Lift the reserve tank caps (8 and 9) and add **water to the water tank with the blue cap and appropriately diluted detergent in the detergent tank with the yellow cap** of the machine. **It is recommended to be very careful during this process because an inverted filling up** (detergent into the water tank or water into the detergent tank) **causes a steam generator fault.**

(d) **When using detergent (not foamy for extraction machines) please follow the specific instructions: normally 1 liter detergent for every 10 liters water (about 10% is the detergent percentage), making sure to fill in first the detergent to obtain a better mixing. Please be careful with the detergent to be used, as some in commerce, if heated above 100°C , taken to the gaseous state, could emanate highly toxic steams. Be aware to control the technical schedule and to consult the supplier. Be aware to check the technical schedule and to consult the supplier.**

(e) Insert the plug (21) into an electrical outlet, making sure that the voltage and the amperage correspond with those printed on the plate located under the machine.

ATTENTION

WHEN THE WATER TANK IS EMPTY, WITH THE LOW WATER INDICATOR (15) ON, ADD WATER TO THE WATER TANK (9).

Refilling of detergent:

Once the detergent tank is empty, proceed as follows:

1. Add diluted detergent in the tank (8).
2. Activate the switch (35 or 35A, it depends if your machine is equipped with the hot water injection option) until detergent comes out of the accessory.
3. The machine is now ready for use.

OPERATING THE STEAMTECH WITH KIT RADAMES / STAR

Insert the vacuum hose (30) into the vacuum hose outlet (6) and the steam plug (32) into the steam outlet (22) on the machine.

In case your machine is a 6 bar model (see the technical data located under the machine), it is necessary to insert also the hook to fix the hose (39). Push until the latches (5 and 31) lock into place.

Activate the general power switch (11) and switch it to the position “boiler ignition” (13) for the production of steam and wait approx. 3-8 minutes (depending on the model) until the green “ready steam” indicator (14) lights up indicating the boiler has reached its operating pressure. The switches (36,37 and 38) located on the handle have to be in the OFF position.

Positioning the switches (36 and 37) on the handgrip will regulate the steam flow as follows: switch (36) minimum flow, switch (37) medium flow, switches (36 and 37) maximum flow. Use the steam command switch (34) to activate steam flow.

The vacuum switch (38) activates the vacuum cleaner and can be used simultaneously with steam.

The detergent switch (35) or (35A, for models with hot water injection) enables you to inject detergent with the steam by activating it for a few seconds at a time to avoid excess liquid with the steam; to spray hot water please refer to what previously indicated activating the switch (35B).

Attention!!

Using the switch (35B) you will get hot water under pressure which, according to the model of the machine, can reach a temperature of 180°c; please pay attention that the switch has not to be pressed accidentally and that the jet has not to be directed toward people or animals.

To clean with the combination of steam, injection of detergent and vacuum suction, choose the accessory best suited for the job:

The multi-purpose floor tool (51): with appropriate inserts (53,54,66). Inserts are locked into place by sliding the latches (52) toward the internal side (OPEN position), pressing them upwards, then sliding the latches toward the external side (BLOCK position). By consequence apply the tool on the hose or on the extension tubes and lock them by sliding the latches (40) in BLOCK position, then screw the handle screw (40A) (only for 10bar models). Remember that the command switches on the handle (36-37-38) must be on OFF position until the end of this procedure.

Turbo lance steam/vac (42): to be used by itself with the small round brushes (43-46, 49) or with steam plunger (47) and steam scraper (48) according to the cleaning job to be executed. To fix this tool please refer to the fixing instruction indicated above.

Once the cleaning is finished it is recommended to vacuum approx. 3-5 litres of clean water to rinse the inside of the hose (33) and the suction conduits. Wash and dry all accessories used. Remove the vacuum drum (4) and, after emptying and rinsing it, let it dry before storing it away.

OPERATING THE STEAMTECH WITH KIT JULY

Insert steam plug (32) into the steam outlet (22) found on the top right of the machine. Push until the latch (31) locks into place (6 bar models). Activate the locking snap (10 bar models).

Activate the general power switch (11) and switch it to the position “boiler ignition” (13) for the production of steam and wait approx. 3-8 minutes (depending on the model) until the green “ready steam” indicator (14) lights up indicating the boiler has reached its operating pressure. The switches (36,37 and 38) located on the handle have to be in the OFF position.

Activating the switches (36 and 37) on the handgrip will regulate the steam flow as follows: switch (36) minimum flow, switch (37) medium flow, switches (36 and 37) maximum flow. Use the steam command switch (34) to activate steam flow.

Follow the same procedure as “**operating the machine with Kit Radames**” to use water or detergent injection.

Insert the steam lance (71) by sliding the latch (75) to the OPEN position, lock into place and then slide the latch into BLOCK position, then screw the hand wheel screw (40A) (only for 10 bar models).

Follow the same procedure in attaching the rectangular (72) or the triangular brush (74) which can be covered with an absorbing cloth by using the gripper (73) to hold the cloth in place. This is a recommended use to clean delicate surfaces (such as precious wood for ex.) or vertical surfaces (in tiles for ex.) etc. The cloth is acting as dirt "extractor" in this case.

OPERATING WITH THE STEAM LANCE GEYSER (mod. 10 bar)

Insert steam plug (82) into the steam outlet (22) found on the machine.

Activate the general power switch (11) and switch it to the position “boiler ignition” (13) and wait approx. 3-8 minutes (depending on the model) until the green “ready steam” indicator (14) lights up indicating the boiler has reached its operating pressure. Press the steam command switch (83) to activate the steam flow. If necessary press the detergent switch (81) in short intervals to inject detergent.

Insert the desired lance (84-85-86) onto the Geyser handgrip (80) and screw onto the lance the nozzle (87) or the various optional accessories (88-89-90) according to the type of cleaning to be carried out. Now your lance is ready for use.

8. MAINTENANCE

ATTENTION

DISCONNECT FROM ELECTRICAL POWER SUPPLY BEFORE CARRYING OUT USER MAINTENANCE. IT IS RECOMMENDED THAT BOILER MAINTENANCE IS CARRIED OUT WHEN THE EQUIPMENT HAS COOLED DOWN. (I.E. SWITCHED OFF FOR AT LEAST 5 HOURS)

MAINTENANCE OF THE STEAM GENERATOR

ELIMINATING SCALE RESIDUE FROM THE BOILER

If you are not acquainted with the hardness level of the used water, it is recommended to proceed with the boiler cleaning after 24 working hours. On the contrary, if you know the hardness level and it is between 0 and 4 french degrees , the boiler cleaning can be carried out after 100 working hours.

Fill the water tank, placing a recipient container under the machine and remove the boiler drain cap (23) underneath the machine.

Then activate the general power switch (11) and switch it to the position “general ignition” (12), letting the water pump working for a couple of minutes, then put the general power switch (11) in the “OFF” position (11A) and disconnect the power cable (21) from the electrical plug and close the boiler drain cap.

The cleaning of the boiler is completed; connect the power cable (21) into the electrical plug and activate the general power switch (11) into the position (13). It is recommended to activate also the switch (36 minimum steam) on the hose, pressing the safety switch (34) as to allow the outlet of the air remained into the empty boiler. Wait until the refilling system has finished (approx. 3 minutes). The maintenance of the boiler is completed.

MAINTENANCE OF THE VACUUM CLEANER

Specific filter for non soluble powders.

Clean the filter periodically (2A optional).

MAINTENANCE OF THE ACCESSORIES

Grease occasionally joints on the accessories and hose extensions.

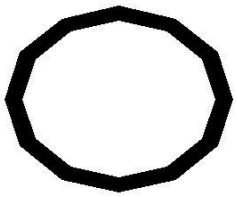

PG5123

OR 29.82x2.62

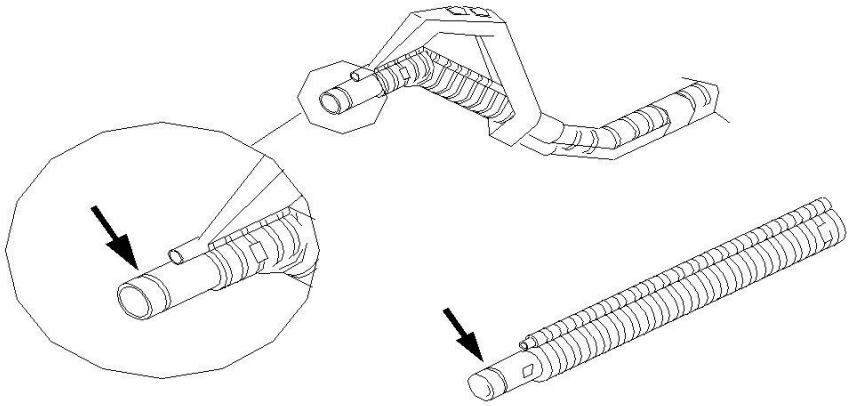

PG5106

OR 9.25x1.78

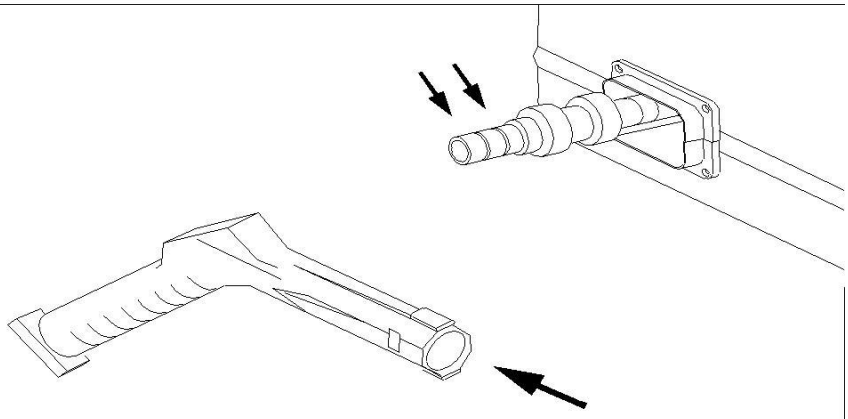

PG5116

OR 6.75x1.78

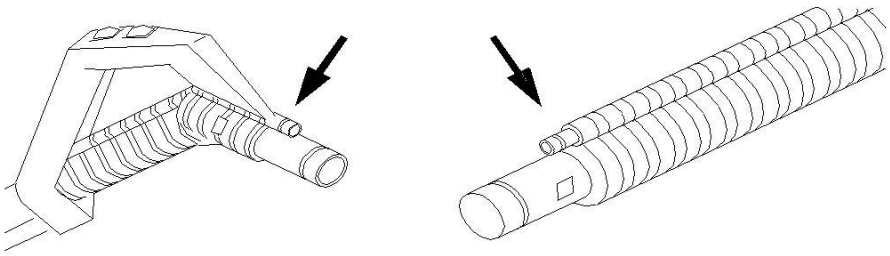

TECNOVAP®

9. BEFORE REFERRING TO THE TECHNICAL SERVICE

PROBLEM	POSSIBLE CAUSE	REMEDY
Machine does not produce steam and vacuum does not work.	Lack of power.	Make sure plug (21) is well inserted and that there is main power to the outlets.
The red "low water" indicator (15) lights up.	All the water from the water tank (10A) has been consumed.	Refill the water tank with clean water.
There is no injection of detergent.	All the detergent from the detergent tank (10) could have been consumed.	Control the level in the detergent tank, if necessary, refill the detergent tank
Suction power is missing.	A) Lack of power to the vacuum cleaner. B) The vacuum tube is obstructed. C) The vacuum drum (4) is full of water.	A) Make sure the switch (2) is on and the plug (7) is well inserted (17) B) Clean tube and accessory used. C) Empty the vacuum drum (4)
Water leaks through the connections of the accessories.	Check the wear of the o-ring.	Clean and lubricate the o-ring with grease. if necessary, replace with one spare supplied.
Steam does not come out.	A) Boiler has not reached yet the operational pressure (green light (14) is off). B) Steam command switches (36-37) are off. C) Steam command switch (34) has not been used.	A) Wait a few minutes. B) Switch on the steam command switches (36-37). C) Use the steam command switch (34) to activate steam flow.
Drops of water come out of the accessories.	At beginning of work water condenses in the tubes and accessories due to the difference in temperature.	After a few minutes of use this problem will cease. If it continues, proceed to the cleaning of the boiler.
Noise inside the generator	The boiler getting cold, after about 6-7 hours creates an internal depression which, at each ignition, provokes some vibrations.	Wait for the pressure stabilization (about 2-3 minutes), the noise disappears.
Accessories do not fit perfectly.	There is dirt build up in the joints and lock/release latches (40).	Clean and lubricate the joints.

10. EC DECLARATION OF CONFORMITY

DICHIARAZIONE DI CONFORMITA' CE
(EC DECLARATION OF CONFORMITY)

TECNOVAP S.R.L. con la presente dichiara che:
le macchine per pulizia a vapore modello:
(Certifies that the steam cleaning machine model):
Chattanooga Steamtech

Risultano conformi alle specifiche delle direttive
(conforms to the specifications of directives)
2006/95/CE 2004/108/CE 2006/42/CE 2002/95/CE

Per il controllo della conformità alle sopraindicate direttive, sono stati seguiti i seguenti standard :
(For the checking of conformity to the above directives, the following standards have been used):

Riferimento alle norme armonizzate:
(Reference to harmonized standards):

EN 60335-1
EN 60335-2-2
EN 60335-2-79
EN 55014-1
EN 55014-2
EN 61000-3-2
EN 61000-3-3

PESCANTINA – VERONA (ITALY)02-02-2010

FRANCHINI Giuliano
(Managing Director)

Extraordinary maintenance procedure

Generator working hours	Date of intervention	Intervention description, replaced components etc.

THE MANUFACTURER RESERVES THE RIGHT TO PRODUCE TECHNICAL AND STRUCTURAL IMPROVEMENTS WITHOUT PRIOR NOTICE.

WB FLOOR MACHINES
SALES · SERVICE · HIRE

01293 852022
info@wbfloormachines.co.uk
www.wbfloormachines.co.uk
Unit 7 Burns Way, Holmbush Potteries Estate, Horsham RH12 4ST