TECNOVAP

L'ARTE DEL VAPORE

GAL Jet Steam Professional

USER INSTRUCTION

This manual is available in **digital format** on request

kindly contact: xxxxxxxxxxxxxxxx

info@duplex-cleaning.com

ENGLISH

Interpretation of the symbols placed on the unit

BEFORE USING THE STEAM GENERATOR, READ AND FOLLOW THIS INSTRUCTION MANUAL.

IT IS RECOMMENDED TO KEEP THIS INSTRUCTION MANUAL TO CONSULT IT LATER OR TO GIVE IT TO THE FOLLOWING OWNERS.

PLEASE READ THE SAFETY INSTRUCTIONS ON THIS HANDBOOK BEFORE PROCEEDING WITH THE FIRST USE.

EVENTUAL DAMAGES DUE TO THE TRANSPORT MUST BE COMUNICATED AS SOON AS POSSIBLE TO YOUR OWN RETAILER.

	ATTENTION!! **STEAM…. RISK OF BURNS**
	ATTENTION!!
	READ THE OPERATING MANUAL
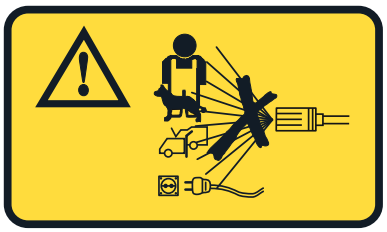	**DO NO DIRECT THE STEAM JET AGAINST PEOPLE, ANIMALS, ELECTRICAL DEVICES UNDER TENSION OR THE UNIT ITSELF**

ENVIRONMENT PROTECTION

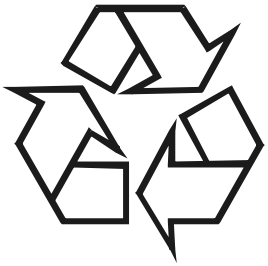	ALL PACKAGING ARE RECYCLABLE, PACKINGS DO NOT HAVE TO BE THROWN IN THE DOMESTIC WASTE BUT THEY HAVE TO BE DELIVERED TO THE CENTERS SPECIALIZED FOR THE DISPOSING OF THE WASTE.

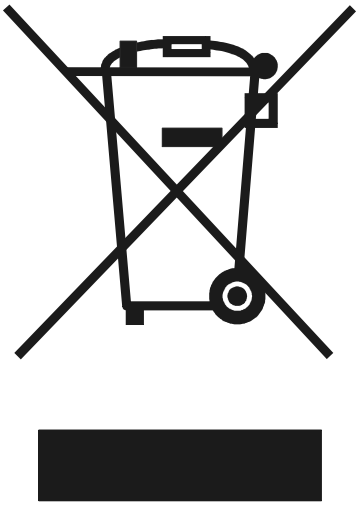	ALL DEVICES NOT USED ANYMORE CONTAIN PRECIOUS RECYCLABLE MATERIALS THAT SHOULD BE DELIVERED TO THE CENTERS SUITABLE FOR THE DISPOSING OF THE WASTE. ELECTRIC AND ELECTRONIC EQUIPMENT, BATTERIES, OIL AND SIMILAR SUBSTANCES MUST BE RECYCLED IN THE PROPER RECYCLING CENTERS AND MUST NOT BE LEFT IN THE ENVIRONMENT.
	SUBSTANCES SUCH AS OIL FOR MOTORS, DIESEL OIL, PETROL MUST NOT BE LEFT IN THE ENVIRONMENT AND MUST BE RECYCLED IN THE PROPER RECYCLING CENTERS ACCORDING TO THE ENVIRONMENTAL REGULATIONS.
The user might return the unit for disposal also to the retailer when purchasing a new equivalent device on a one to one ratio.	

1. SUMMARY

1. SUMMARY
2. SAFETY REGULATIONS
3. PREFACE
4. TECHNICAL CHARACTERISTICS
5. NOMENCLATURE
6. TECHNICAL DRAWINGS
7. OPERATING INSTRUCTIONS
8. MAINTENANCE
9. BEFORE REFERRING TO THE TECHNICAL SERVICE
10. DECLARATION OF CONFORMITY

2. SAFETY REGULATIONS

- It is recommended not to open or remove any machine part for any reason; in case the unit should present an abnormal functioning or a failure, disconnect the power plug and contact an authorized service center or the dealer where the product has been purchased.
- If the power cable is damaged, it has to be replaced by the manufacturer or by an authorized technical service or by a qualified person in order to prevent any risk.
- It is recommended that the electric supply to this machine should include either a residual current device that will interrupt the supply if the leakage current to earth exceeds 30mA for 30ms or a device which will prove the earth circuit.
- **SAFETY VALVE** This machine is equipped with two safety valves, able to ensure the safety of the machine itself in case other primary control devices are inefficient (due to a failure). Due to the extreme importance of these components and as not to compromise the safety of the machine, it is recommended to provide to check them and to substitute them through an authorized service center every 2 years starting from the purchasing date.
- **PRESSURE SWITCH** This machine is equipped with a pressure switch able to check and to maintain the pressure under certain preset limits (ref. “rated pressure” on the technical label underneath the machine). In case there would be a steam leakage on the lower side of the machine, it means that the functioning of this device has been compromised and the safety valve has been involved as to limit the boiler’s internal pressure. **It is recommended not to use the machine, immediately unplug the machine from the power feeding and call the service center.**
- **THERMOSTATS.** The unit is equipped with 2 thermostats able to control the overtemperature. In case the main control system becomes inefficient, TR1 and TR4 would intervene permanently by deactivating the boiler heating. If this occurs, disconnect the power plug and contact a service center.

- **ATTENTION.** Do not use the appliance within the range of persons.
- **ATTENTION.** The steam jets can be dangerous if not used properly. The jet does not have to be directed against persons, electrical devices under tension or the unit itself.
- **ATTENTION.** Do not direct the jet against yourself or others in order to clean clothes or footwear.
- Disconnect the power, by removing the plug from the electrical socket, before effectuating the maintenance on user's responsibility.
- **ATTENTION.** Risk of explosion. Do not spray flammable liquids.
- This device is not intended to be used by children. Monitor the children so they cannot play with the machine.
- This device is not intended to be used by persons (including children) with a reduced physical, mental or sensorial ability or with insufficient experience and/or competence.
- This unit is not designed to operate at over 2000m above sea level.
- **ATTENTION.** To ensure the machine's safety, use only original spare parts from the manufacturer or spare parts approved by the manufacturer.
- **ATTENTION.** Pressure hoses, accessories and couplings are important for the safety of the machine. Use only those recommended by the manufacturer.
- **ATTENTION.** Do not use the machine if the power cord or other important parts of the machine are damaged, i.e. safety devices, pressure hoses and trigger gun.
- **ATTENTION.** Always switch off the general power switch when leaving the unit unattended.
- **ATTENTION.** If an extension cord is used, the plug and socket must be of a watertight construction.
- **ATTENTION.** Inadequate extension cords can be dangerous. If an extension cord is used it must be suitable for outdoor use and the connections must be dry and distant from the ground. It is recommended to use a reel able to keep the plug at a minimum distance of 60mm from the ground.
- The user must not leave the iron (optional) unattended when it is connected to the power supply.
- The hand-arm vibration data, referred to this device, are not mentioned as they are below 2.5 m/s^2.

3. PREFACE

Dear Client,

We would like to congratulate you on your choice.

This appliance, together with its accessories, is designed to clean and sanitize surfaces and can be used in both the domestic and the commercial sector.

Please consider that the machine before leaving our factory has been tested and tweaked by qualified and specialized personnel in order to have the best performing results.

In order to improve and to update its production, as well as to always offer new technological models, TECNOVAP has projected and realized the **GAL** steam generator.

This model has a reliable stainless steel boiler which allows to obtain a powerful and steady steam flow.

Please consider that the machine shown on the cover of this user manual can be equipped with a cart (OPTIONAL).

4. TECHNICAL CHARACTERISTICS

- **Tecnovap Srl** Via dei Sassi,1A 37026 Pescantina Verona Italy

Model		**Gal 6b** Type text here Jet Steam Professional	**Gal 8b**
Code		G029060	GW29080
Rated Voltage	V	230	
Current type	Hz	50/60 1~	
Rated Power Boiler	kW	2.4	
Max Rated Power	kW	2.45	
Rated Steam Pressure	kPa bar	600 6	800 8
Permissible Steam Pressure	kPa bar	750 7,5	1000 10
Max. Steam Rated Flow	g/min	64	
Max. Steam Rated Flow	Kg/h	3.8	
Max temperature	°C	164	174
Kickback forces	N	< 20	
Vibration hand-arm	m/s^2	< 2,5	
Mass	kg	14	
Sound pressure level	LpA	< 70 dB(A)	

5. NOMENCLATURE

1) Water tank - cap
2) Power cord with plug
3) General power switch
4) Control panel
4A) “Stand-by” button
4B) “Stand-by” indicator
4C) “Boiler on” button
4D) “Boiler on” indicator
4E) Pressure/temperature button
4F) “Steam ready” indicator
4G) Minimum steam indicator
4H) Medium steam indicator
4I) “Low Water” indicator
4L) Digital display
7) Steam outlet / accessory connection
8) Boiler drain cap

9) Steam hose
10) Safety switch - steam / water
10A) Locking lever for steam outlet
11) Steam hose control panel
11A) Steam selector (min-med-max)
11B) “Minimum steam” light
11C) “Medium steam” light
11D) “Maximum steam” light
11E) “Water injection” and “low water” indicator light
11F) Hot water injection switch
12) Steam plug / remote control
13) Steam plug blocking hook

15) Extension tubes
16) Blocking hook
17) Rectangular brush
17A) Cloth holder
18) Triangular brush
19) Window cleaner
20) Steam lance

21) Nylon brush Ø 60
22) Small nylon brush Ø 28
23) Small brass brush Ø 28
24) Small st. steel brush Ø 28
25) Small triangular brush
26) Steam plunger
27) Steam scraper
28) Steel wool pad
29) Water filling bottle
30) Steam iron (optional)
30A) Thermostat
30B) Steam command switch
30C) Rubber rest pad for iron
32) Rectangular buffer (optional)
33) Triangular buffer (optional)
34) Microfiber cloth (optional)

6. TECHNICAL DRAWINGS

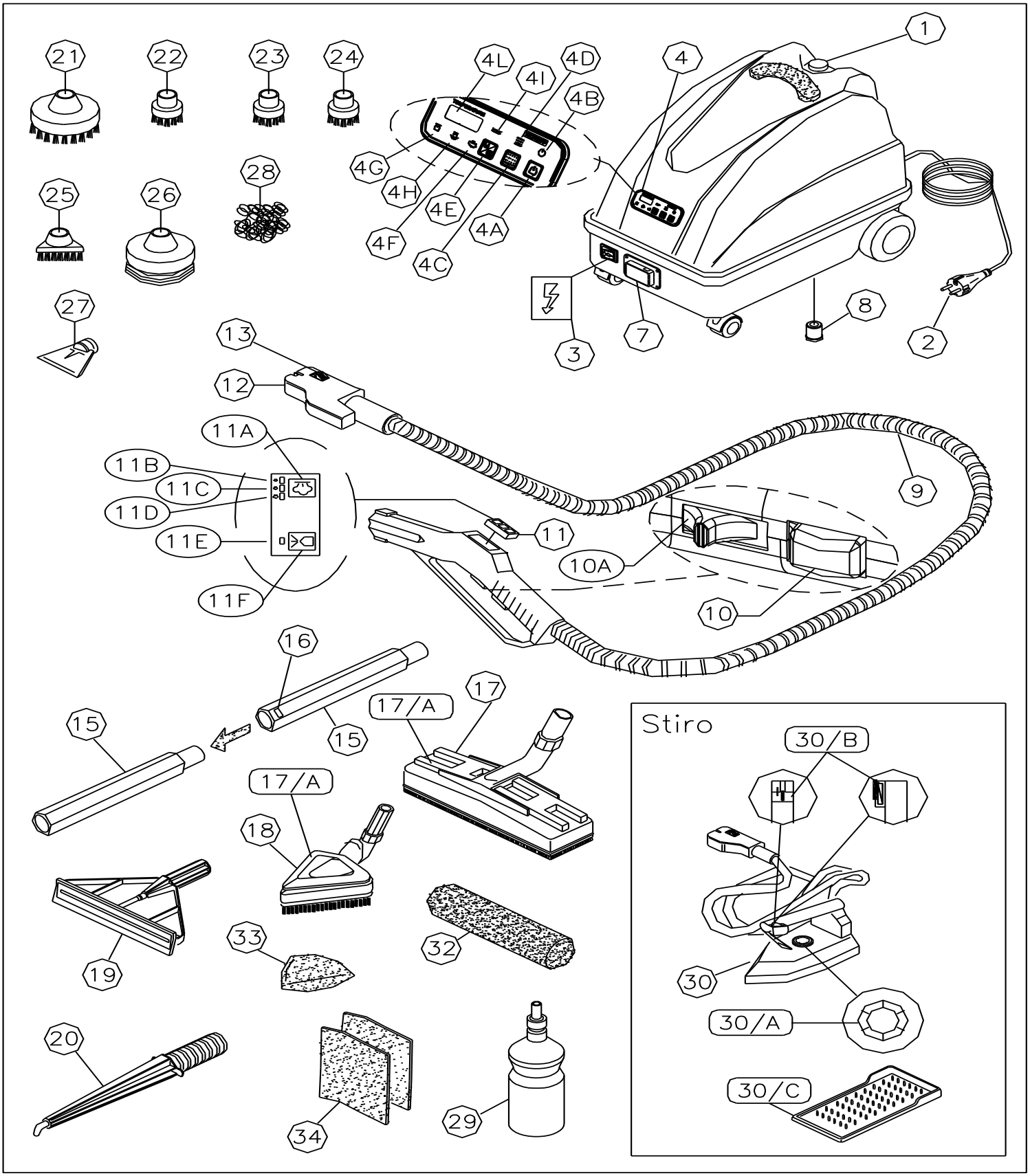

CONTROL PANEL FUNCTIONS

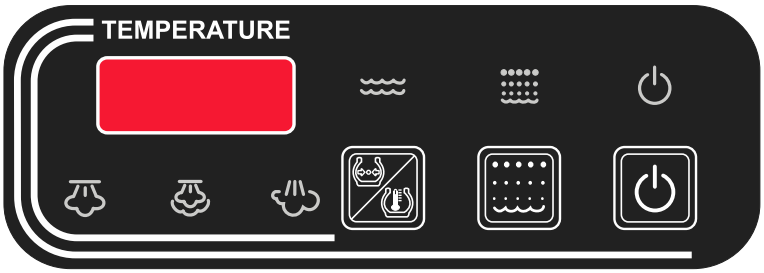

“Stand-by” button
Activates/deactivates the electronic components, steam solenoid valves and boiler refilling pump.

“Stand-by” indicator
Indicates that the machine is switched on.

“Boiler on” button
Activates/deactivates the heating elements and the overheated water injection valve.

“Boiler on” indicator
Indicates that the boiler is switched on.

Pressure / temperature button
Visualizes the pressure in bar or the temperature in Celsius on display.

“Low water” indicator
Indicates the lack of water in the tank, the blinking light indication is accompanied by an intermittent buzzer.

“Steam ready” indicator
Indicates that the generator is ready for use.

“Minimum steam” indicator
Indicates that minimum steam flow has been selected.

“Medium steam” indicator
Indicates that medium steam flow has been selected.

“Maximum steam” indicator
Indicates that maximum steam flow has been selected.

7. OPERATING INSTRUCTIONS

Open the box and eventually fix the unit on its cart (optional).

Remove the tank cap (1) and add water, **it is recommended to add softened water only, all other liquids can damage the generator or make it unsafe.** Use 50ml Hydroscale per water tank

Insert the plug (2) into the electrical socket, making sure that the voltage and the amperage correspond to those printed on the plate located on the machine.

ATTENTION

This device is equipped with two sensors which control the water presence both in the water tank (1) and in the boiler. Activate the “main switch” and press the “stand-by” button in order to turn the machine on. The system will firstly check the water level in the boiler and then in the water tank. If the water level in the boiler is not sufficient, the system will automatically restore it; in this case the “low water” indicator will be blinking for the whole duration of the operation (approx. 3 seconds). Should the indicator remain on for a longer time followed by an acoustic signal, it means the water tank (1) is empty and needs to be refilled.

The indication will be visible on the steam hose too as the “hot water injection” indicator will be blinking.

Proceed by adding water to the water tank (1) and press then the “boiler on” button. This operation can be carried out without turning the machine off. Once the “steam ready” indicator comes on, the machine is ready for use again.

7.1 USAGE OF TOOLS

Insert the steam plug (12) into the steam outlet (7) placed on the machine and press well the blocking hook (13) as to guarantee the fixing of the hose.

Steam selection is deactivated at each machine's switching on. Led indicators next to the "steam selector" will alternately blink reminding the necessity to set the desired steam flow; the following steam levels will be set by repeatedly pressing the "steam selector" : minimum steam, medium steam, maximum steam, no selection.

Wait for the "ready steam" indicator to come on, then deactivate the locking lever (10A) and press the "safety switch" (10) on the hose in order to start steam production.

To activate the "hot water" function (for models with hot water injection only), press at short intervals the "hot water injection" button together with the safety switch (10). Hot water injection is not on a continuous basis, therefore it should be used at short intervals of a few seconds to avoid a too quick emptying of the relative recipient.

ATTENTION

Using the "hot water injection" button you will get hot water under pressure which, according to the model of the machine, can reach a temperature of 170°C. Please pay attention that the switch is not pressed accidentally and that the jet is not directed towards people or animals.

To clean with the combination of steam and hot water injection choose the accessory best suited for the job as follows:

Insert the brush (17-18) into the steam hose handgrip (9) or into extension tubes (15) and fix it with the blocking hook (16). Remember to block the safety switch (10) with the locking lever (10A).

Steam lance (20): to be used by itself or with small brushes (21-22-23-24-25), the steam plunger (26) or with the steam scraper (27) according to the cleaning job to be executed. For the use of this accessory follow the above reported instructions for brush assembling.

The brushes supplied within July kit can be wrapped with a cloth during the use which can be fixed with the cloth holder (17A). This method is suggested for cleaning delicate surfaces (ex. precious wood) or vertical surfaces (ex. tiles) etc. In such case the cloth works as a dirt extractor.

7.2 POWER SAVE MODE

The power save mode permits to reduce the unit's consumption, therefore the machine automatically turns off after 1 hour of inactivity. For activating or deactivating such mode it is sufficient to switch the generator off by pressing the "stand-by" switch . "OFF" indication will appear on the display. Press the "boiler on" switch and hold it for 3 seconds. **T.ON** indication will appear on the display. Press and hold again for 3 seconds the "boiler on" switch in order to deactivate the function. **T.OFF** will appear on the display.

7.3 PRACTICAL TIPS

STEAM LANCE

Direct the strong steam flow toward cracks, hidden areas, greasy objects, kitchen tops, carpets, carpeted floors, armchairs, sofas, tapestries, car engines etc. and you will be able to remove easily and completely grime, grease, dirt in general and obtain a safe sanitation. After this operation it will be indispensable to pass over the treated surfaces with a dry cloth.

IN THE KITCHEN

We suggest the use of the steam lance (20) with the various small brushes (22-23-24). These brushes help to remove the most obstinate dirt from kitchen tops, hoods, fryers, etc. It is possible to clean the dishwasher by spraying steam with the steam lance (20). In case of heavy incrustation, we suggest to use the small nylon brush (22).

IN THE BATHROOM

For all areas which are difficult to reach we suggest applying to the steam hose (9) the steam lance (20) and a small brush (22). This accessory allows cleaning radiator crevices and all difficult points. In case of washbasin clogging, attach the steam plunger (26) to the steam lance (20) and direct the steam jet into the drain.

WARNING

EXERT THE LEAST POSSIBLE PRESSURE WHEN USING THE SMALL BRUSHES ON PORCELAIN.

WINDOW CLEANER (on glass or plastic surfaces)

We suggest using the window cleaner (19) by inserting it directly on the steam hose handgrip (9) and applying steam on the surface to be cleaned. Then use the squeegee blade mounted on the window cleaner to remove the humidity by using vertical movements to bring the dirt to the bottom of the surface. Use a cotton or microfiber cloth to remove the dirt from the bottom of the treated surface.

TRIANGULAR BRUSH

Suitable for the cleaning of armchairs, sofas and mattresses. We suggest to use the triangular brush with a cloth fastened with the respective clamps (17A).

RECTANGULAR BRUSH (For tiled floors)

To carry out specific grout cleaning we suggest to use the steam lance (20) with a small brush (22 or 23 according to the need). This way it will be possible to get rid of the most difficult dirt and remove it from the grouts thanks to the pressure applied. To remove the dirt from the floor use the rectangular brush (17) wrapped in a cloth, which will work as an extractor when fastened with the special clamps (17A). We suggest applying steam also while picking up the dirt. To get a good result, work with surface areas not

larger than 5sqm at a time thus preventing dirt from drying and adhering on the floor again.

We suggest to use the brush without the cloth when the dirt to be removed is considerable, meanwhile it is enough to work with the brush wrapped in a cloth in case of a not considerable the dirt.

When confronted with solid objects while cleaning the floor (i.e. chewing-gum) use the special scraper (27) which can be attached to the steam lance (20) and is able to remove stubborn objects without scratching the treated surface.

To remove wax from the floor use a cloth fastened to the rectangular brush (17). The steam helps to loosen the wax so that its removal becomes easier. To spread the wax on the floor use as mentioned above a clean cloth fastened onto the brush. Put the wax on the cloth, the heat of the steam will help spread the wax evenly so that its penetration will be easier. When the wax is dry proceed with normal polishing methods.

WARNING

THE GENERATOR PRODUCES STEAM WITH A TEMPERATURE OVER 100°C. BEFORE STARTING THE CLEANING TASK WE SUGGEST TO TRY ON A SMALL AREA TO AVOID DAMAGES.

Marble and parquet floors

We suggest adding a steam buffer (32) to the rectangular brush (17) and then wrap it with a cotton cloth to avoid scratching the surface. To continue the cleaning it is necessary to change the cloth according to the quantity of dirt to be collected on the floor.

ATTENTION

THE STEAM SHOULD NOT BE IN DIRECT CONTACT WITH THIS KIND OF FLOOR FOR AN EXTENDED PERIOD OF TIME! SUCH SURFACES MAY BE DAMAGED IN CASE OF COMBINED USE OF EXCESSIVE HEAT, HUMIDITY AND BRISTLES. THEREFORE CARRY OUT THE CLEANING TASK IN THE SHORTEST POSSIBLE TIME.

Carpeted floors

Before carrying out the steam cleaning we suggest that you clean the carpeted area with a vacuum cleaner. Then use the rectangular (17) or the triangular (18) brush with a cloth wrapped around it. To continue with the cleaning the cloth should be replaced according to the quantity of dirt on the floor.

Car interiors

To clean car interiors (upholstery, carpets and seats) follow the cleaning instructions for the carpeted floors. To clean the dashboard it is enough to steam the surface and to wipe it then with a cloth in order to dry the humidity.

Steam iron

Mod. Tulipano:

To iron with steam we suggest to position the iron thermostat (30A) between the symbol "••" (wool) and the symbol "•••" (cotton). Wait for a few minutes as to allow the iron to reach its ideal temperature. The steam flow from the iron is obtained by activating at short intervals the red switch (30B) on the handgrip of the iron.

For dry ironing do not press the red switch (30B). In this case position the thermostat according to the type of cloth being ironed.

Mod. Dublo:

To iron with steam we suggest to position the iron thermostat (30A) between the symbol "••" (wool) and the symbol "•••" (cotton). Wait for a few minutes to allow the iron to reach its ideal temperature, then press the red button (30B) on the handgrip of the iron to activate the steam flow. To have a constant steam flow press and move down the blocking switch on the handgrip of the iron. To release the blocking move the button up.

For dry ironing switch the "boiler switch" off (08) and position the thermostat according to the type of cloth being ironed. If the power save mode is activated (chapter 7) the device will switch off after 1 hour independently form the usage of the iron.

For dry ironing do not press the red switch (30B). In this case position the thermostat according to the type of cloth being ironed.

To remove the shine from clothes, brighten up wool tissue, curtains etc. use the iron vertically, directing the steam flow onto the object.

8. MAINTENANCE

8.1 ELIMINATION OF SCALE DEPOSITS FROM THE BOILER

The device is equipped with a maintenance warning system which displays every 20 effective working hours the **CALC** advice to warn the user to proceed with the boiler drainage.

ATTENTION

THE BOILER CLEANING MUST BE CARRIED OUT WHEN THE EQUIPMENT HAS COOLED DOWN (I.E. SWITCHED OFF SINCE AT LEAST 5 HOURS). THE MACHINE SHOULD BE DISCONNECTED FROM THE ELECTRICAL POWER SUPPLY AT LEAST 5 HOURS BEFORE CARRYING OUT THE MAINTENANCE AND FOR ALL THE DURATION OF THE MAINTENANCE PHASE.

Place an adequate recipient under the machine (to collect the water drained from the boiler – approx. 1,5lt), use the supplied special key in order to remove the boiler drain cap (8) and then wait until the boiler is completely emptied.

Clean eventual residuals from the cap (8) and properly close it on the boiler's drain again.

The cleaning of the boiler is completed. Insert the power cable (2) into the socket, further activate the main switch (3) and the "stand-by" button in order to switch the generator on.

Press the "stand-by" button and hold it for 5 seconds in order to remove the **CALC** maintenance warning message. The maintenance of the boiler is finished. If necessary, add water to the water tank (1). Activate the general switch (3), the "stand-by" button and the "boiler on" button in order to switch the generator on.

8.2. HOUR COUNTERS

The device is equipped with two hour-counters: total (not resettable) and partial (resettable by the user). To visualize the hour counters, switch the device off by using the "stand-by" button, "OFF" indication will appear on the display. To visualize the total hour counter, press the "boiler on" button , "C1" indication will appear on the display followed by total hour counter. Press again the "boiler on" button in order to visualize the partial hour counter, "C2" indication will appear on the display followed by partial hour counter.

Reset of "C2" partial hour counter

Turn the unit off by using the general power switch (3).

Press and hold together the "boiler on" and the "pressure/temperature" buttons, while you keep them pressed switch the machine on again by using the general power switch (3).

8.3. MAINTENANCE OF THE ACCESSORIES

Grease occasionally joints on the accessories and hose extensions.

PG5106	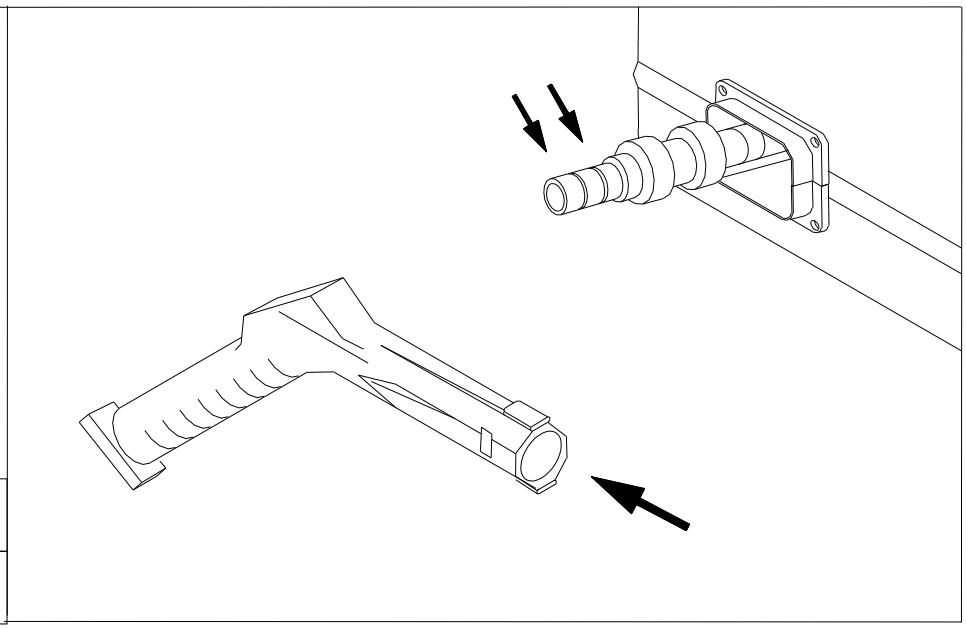
OR 9.25x1.78	

9. BEFORE REFERRING TO THE TECHNICAL SERVICE

PROBLEM	POSSIBLE CAUSE	REMEDY
The machine does not produce steam.	Lack of power.	Make sure that the plug (2) is well inserted and that the main switch of the building is activated.
The red “low water” indicator (4I) lights up.	All the water from the water tank (1) has been consumed.	Refill the water tank (1) with clean water.
Water leaks through the connections of the accessories.	Check the wear of the o-rings.	Clean and lubricate the o-rings with grease. If necessary, replace with the spares supplied.
Steam does not come out.	A) Boiler has not reached the operational pressure yet (“steam ready” indicator is off). B) Steam activation button (11A) is off. C) Safety switch (10) has not been activated.	A) Wait for a few minutes. B) Activate the steam button (11A). C) Activate the steam/water safety switch (10).
Drops of water come out of the accessories.	At beginning of work water condenses in the tubes and accessories due to the difference in temperature.	After a few minutes of use this problem will disappear. If it continues, proceed with the boiler cleaning.
Noise inside the generator.	The boiler getting cold, after about 6-7 hours creates an internal depression which, at each ignition, provokes some vibrations.	Wait until the pressure stabilizes (about 2-3 minutes), the noise will disappear.
Accessories do not fit perfectly.	There is dirt build up in the joints and the connections.	Clean and lubricate the joints of the accessories.

WB FLOOR MACHINES
SALES · SERVICE · HIRE

01293 852022
info@wbfloormachines.co.uk
www.wbfloormachines.co.uk
Unit 7 Burns Way, Holmbush Potteries Estate, Horsham RH12 4ST

10. DECLARATION OF CONFORMITY

DICHIARAZIONE DI CONFORMITA' CE
(EC DECLARATION OF CONFORMITY)

TECNOVAP S.R.L. con la presente dichiara che:
la macchina per pulizia a vapore modello:
(Certifies that the steam cleaning machine model:)
Chattanooga Gal

Risulta conforme alle specifiche delle direttive
(conforms to the specifications of directives)
2014/35/UE 2014/30/UE 2011/65/UE 2006/42/EC

Per il controllo della conformità alle sopraindicate direttive, sono stati seguiti i seguenti standard :
(For the checking of conformity to the above directives, the following standards have been used):

Riferimento alle norme armonizzate:
(Reference to harmonized standards):

EN 60335-1
EN 60335-2-79
EN 60335-2-3
EN 55014-1
EN 55014-2
EN 61000-3-2
EN 61000-3-3

PESCANTINA – VERONA (ITALY) 31-08-2017

Ordinary maintenance procedures

Generator working hours	Frequency of intervention	Notes

Extraordinary maintenance procedures

Generator working hours	Intervention	Intervention description, replaced components etc.

NOTES